Cable Puller

User's Guide

H6000

Manufacturers of Equipment for the Electrical and Telecommunications Industries

Cable Puller H6000

Features of H6000

- **Slip-type capstan or optional self-tailing capstan**
- **Two-speed drive motor with built-in amp tension meter and momentary footswitch**
- **Two-section high-stress frame with optional third mid-arm**
- **Pulling capacities:**

Standard Pulling Positions

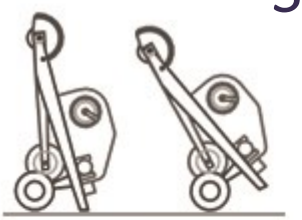

Typical Storage and Transportation Position: Fold upper-arm frame as shown and lock into place. Unit can be tilted and held by cross-member for ease of transportation.

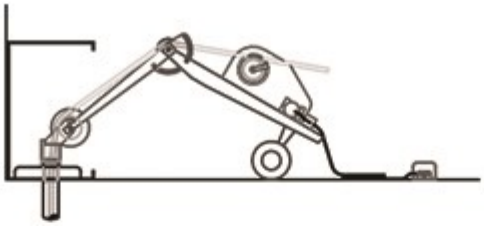

Typical Floor Pull: Upper-arm is approximately 120 degrees to base of frame. Rope runs over sheaves.

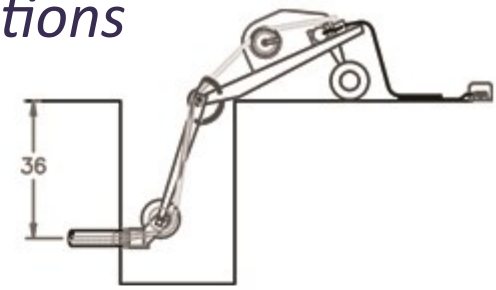

Typical Vault Pull: Unit is rotated forward into vault and rested on back frame. Rope goes under first sheave and over second sheave.

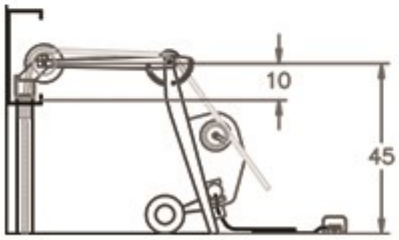

Typical Panel Pull: Unit is rested on back of frame. Rope goes over sheaves.

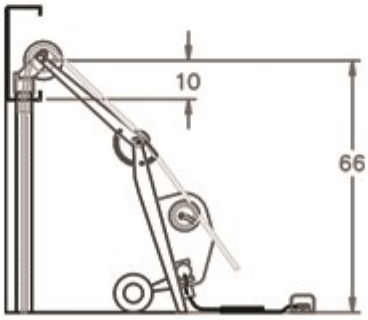

Typical Mid Panel Pull: Unit is rested on back of frame. Rope goes over sheaves.

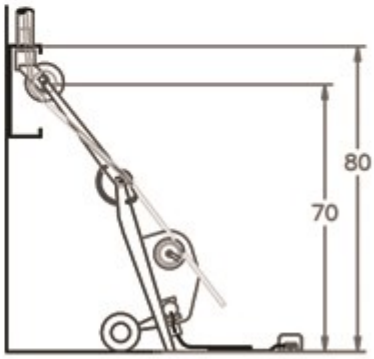

Typical Upper Panel Pull: Unit is rested on back frame. Rope goes under first sheave and over second sheave.

HIS Business Manufacturing Company

Tel: (619) 447-0009 (800) 292-9831 Fax: (619) 447-4695

Web Site: www.hizbiz.com Email: sales@hizbiz.com

Cable Puller H6000

HIS Business Manufacturing Company

HIS Cable Puller—H6000

Table of Contents

General Safety	.....	4
H6000 Quick Set-Up	.....	5
H6000 Quick Set-Up	.....	6
H6000 Quick Set-Up	.....	7
Operating the H6000	.....	8
Operating the H6000	.....	9
H6000 Parts Breakdown	.....	10
H6000 Parts List	.....	11

Tel: (619) 447-0009 (800) 292-9831 Fax: (619) 447-4695
Web Site: www.hizbiz.com Email: sales@hizbiz.com

General Safety Instructions

Common Sense, Skill, Safe Working Practices and Caution can help avoid most injuries and keep everyone working!

HIS Cable Puller is designed for productivity and safety. One person can easily and efficiently transport, set up and pull cable. Always understand the function of the cable puller before operating. Only experienced journeymen should operate cable pulling equipment.

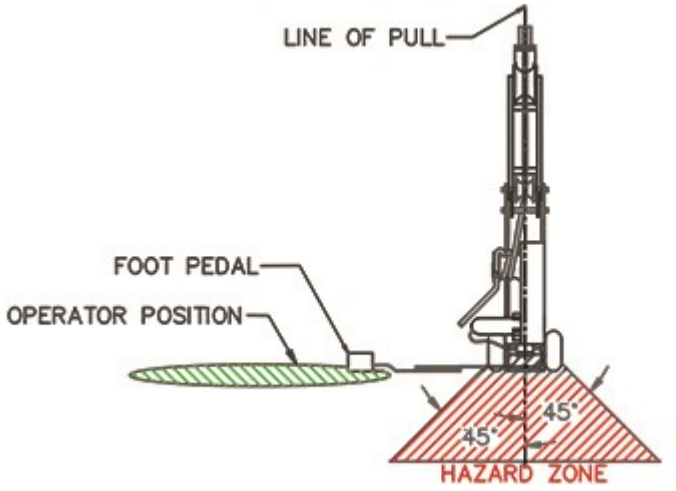

The cable puller operator should stand off to the side of the puller away from the line of pull. Always stay clear of the hazard area.

WARNING! Not intended to be used for pulling live electrical cable

Always read instructions before operating puller

Always inspect puller before operating

1. Inspect cable puller, power lines and surrounding area.
2. Clean up cluttered work area before setting up puller.
3. Inspect cable pulling rope. Rope and eyelet must be in excellent condition. Use high quality, high grade low stretch cable pulling rope.
4. Never stand on or near the coiled pulling rope as it lays on the ground.
5. Always pay close attention to cable pulling. Never let anyone or anything distract this operation, unless an emergency situation occurs.
6. Never use in water or in dangerous environments.
7. Think SAFETY, SAFETY, SAFETY!
8. After pull is completed, dismount puller, clean up and inspect equipment before storing.

Transporting HIS Cable Puller

Before moving the cable puller, inspect the equipment to make sure that the extension arms are secured in the locking position using the locking axle shafts provided. Check to be sure power cord and foot switch is contained with puller and not loose.

When rolling the cable puller steady the axle using your foot as you lean the unit back to find it's natural pivot point at about waist high or 34". The unit then becomes easy to transport in either direction without exerting undue stress.

When loading and unloading cable pullers using a hoist, secure one end of a strap to the handle on the capstan / motor housing. Loop the other end through the locking axle shaft

NOTE: *When setting up cable puller and puller arms BE AWARE OF PINCH POINTS*

Quick Set-Up

Pre-Installation Instructions

1. **Inspect cable puller, power lines and surrounding area.**
2. **Clean-up cluttered work area before setting up cable puller.**
3. **Wear protective clothing. Loose clothing may be dangerous.**
4. **Check power supply. Recommended minimum is 3500 watts.**
5. **Whenever possible use a safety chain or anchor to hold puller down.**
6. **Check Locking Pins and Rope Sheaves.**

Offset Conduit Adapters are designed to be rotated to mount flush in housing box and are available in standard schedule #40, and schedule #80

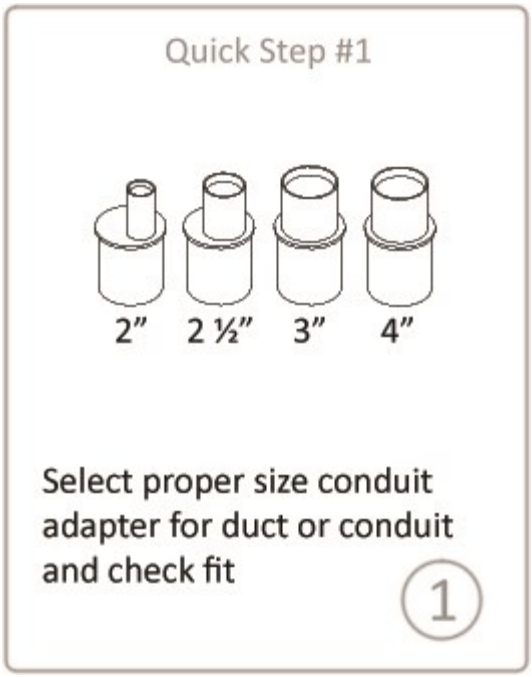

(2“ conduit adapter shown)

HIS Business Manufacturing Company
Tel: (619) 447-0009 (800) 292-9831 Fax: (619) 447-4695
Web Site: www.hizbiz.com Email: sales@hizbiz.com

Quick Set-Up

Quick Step #3

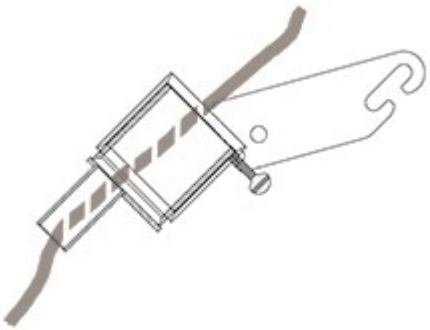

Thread pull-rope through conduit adapter and pull-yoke

3

Quick Step #4

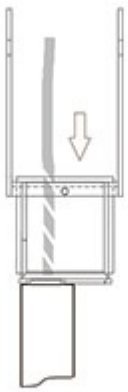

Insert conduit adapter and yoke into conduit or duct

4

Quick Step #5

Position cable puller and adjust frame into proper pulling position. Rope should thread under and/or over sheaves as required (see diagrams). As rope passes over sheave at an angle, it will help hold the puller down.

5

Quick Step #6

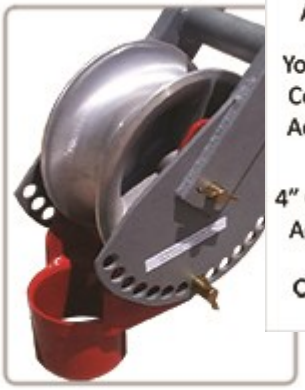

Set puller into yoke using end-sheave pin

6

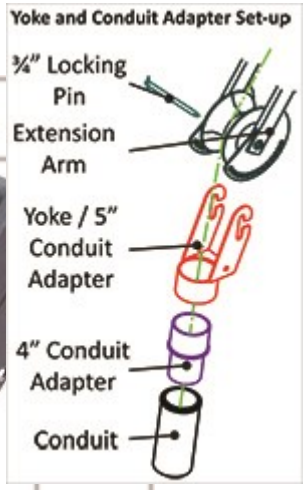

Quick Set-Up

Quick Step #7

Wrap rope clockwise around capstan several times. Each successive wrap reduces tailing tension and increases pulling capacity.

7

Quick Step #8

Amp Tension Meter monitors amp draw. For a more accurate indication of pulling tension use the HIS Running Line Tensiometer

Before turning puller on check power supply. Recommended minimum of 3500 watts. Check locking pins, rope sheaves and position of puller.

8

Quick Step #9

Set Pulling speed. Start pull in low speed. Test stability of puller set-up. Turn puller toggle switch on. This will make the capstan turn and start pulling cable. Check stability of puller with low pulling load. Make set-up adjustments as needed. Light cable can be pulled at high speed. As pulling load increases pulling speed will reduce.

9

NOTES:

Whenever possible use a safety chain or anchor to hold puller down, in addition to conduit adapter/yoke mounted in conduit or duct.

When pulling speed slows due to too much load, it is recommended to switch to low speed to protect drive motor. This is changed at operator's judgement.

Operating the H6000

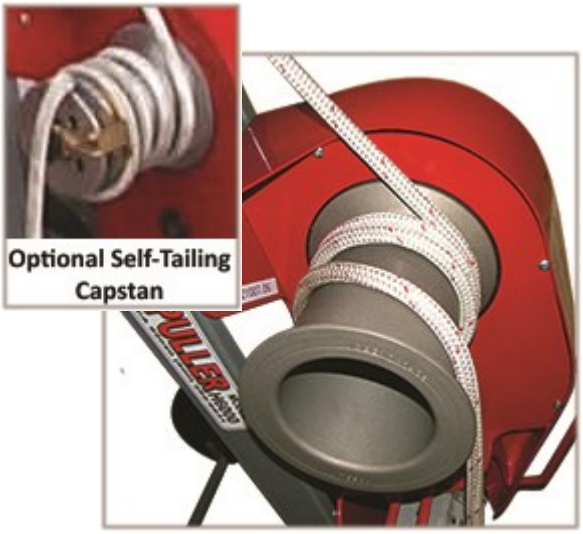

5. Wrap rope clockwise around capstan several times. Each successive wrap reduces tailing tension.

6. Set motor switch to low speed (follow instructions on name plate). Turn toggle switch on. Use footswitch to operate motor.

7. Apply friction during pull. Stand to side outside 45 degree safety angle. Discard rope as it feeds.

8. After pull is complete unwrap rope from capstan. Disengage upper arm from yoke. Lock upper arm in storage position.

**CAUTION: MAKE SURE ROPE IS NOT UNDER-LOAD BEFORE REMOVING*

Operating the H6000

1. Loading and unloading using hoist (shown with optional mid-arm).

2. Transporting cable puller using the natural pivot point.

3. Thread rope through adapter and yoke and place in conduit.

4. Position puller. Lift upper arm and insert locking pin at desired height. Thread rope. Insert locking pin in yoke.

H6000 Parts Breakdown

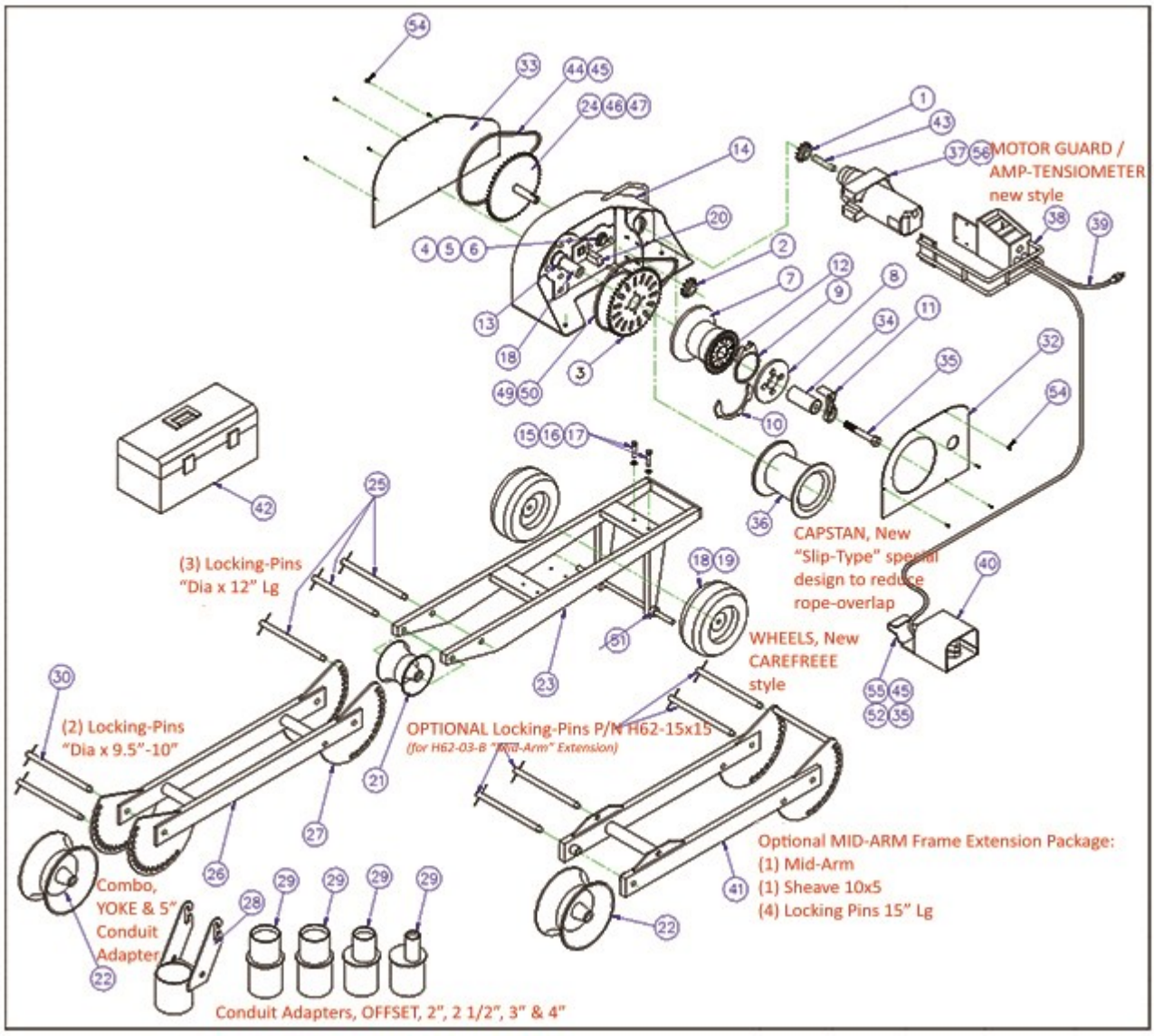

Mid-Section Frame

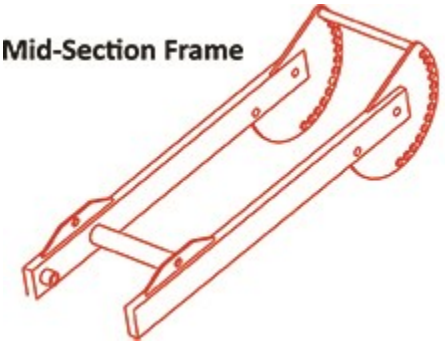

(1) Sheave
10 ½" x 5" x ¾"

(4) Locking Pins
¾" x 15"

Optional

Self-Tailing

HIS Business Manufacturing Company

Tel: (619) 447-0009 (800) 292-9831 Fax: (619) 447-4695

Web Site: www.hizbiz.com Email: sales@hizbiz.com

H6000 Parts List

ITEM	PART NO.	DESCRIPTION	QTY
1	H61-06-001	SPROCKET – MOTOR	1
2	H61-23	SPROCKET, TRANSFER, Final Drive	1
3	H61-22	CAPSTAN SPROCKET	1
4	H61-27-PL	TRANSFER BUSHING	1
5	H61-27-FL	TRANSFER BUSHING – FLANGE	1
6	H61-26	TRANSFER BUSHING THRUST WASHER N/A	1
7	H63-02-001	CAPSTAN HOUSING	1
8	H63-03-001	DENTATOR WHEEL	1
9	H63-04-001	FINGER	1
10	H63-05-001	CONTROL RING	1
11	H63-08-001	INDEX	1
12	H63-09-001	CAPSTAN BUSHING, 1-FL & 1-PL	1
13	H63-10	CAPSTAN THRUST WASHER	1
14	H64-03	POWER PACK HOUSING, STEEL	1
15	H64-06-001	BOLT, HEX	4
16	H64-0-001	WASHER, FLAT	4
17	H64-08-001	NUT, HEX – NYLOCK	4
18	H62-04-001	WHEEL, 10" – CARE-FREE	2
19	H62-09-001	COTTER PIN	2
20	H64-11-001	ANTI-ROTATION BAR	1
21	H62-12	SHEAVE, CENTER, 6"D x 5"W HS-6x5A	1
22	H62-26	SHEAVE, MAIN, 10.25"D x 5"W HS-10x5A	1
23	H62-02	BASE FRAME	1
24	H61-09	TRANSFER SPROCKET ASSY – PRIMARY	1
25	H62-15x12	LOCKING-PINS	3
26	H62-03	EXTENSION ARM, Straight or Tapered	1
27	H62-18	LOCKING PLATE	4
28	H62-21	YOKE / 5" CONDUIT ADAPTER COMBO	1
29	H62-22	CONDUIT ADAPTERS: 2", 2.5", 3" & 4"	1 EA
30	H62-15X9.5	LOCKING-PINS ¾" Dia x 9.5" – 10" Lg	1
31	H64-05	AMP BOX	1
32	H64-31	COVER-PLATE: CAPSTAN SIDE	1
33	H64-32	COVER-PLATE: PRIMARY DRIVE SIDE	1
34	H63-07-001	RETAINING BUSHING	1
35	H63-06-001	HEX BOLT	1
36	H63-01	SLIP TYPE CAPSTAN, New Style (2008)	1
37	H61-04-001	MOTOR, Milwaukee #4292	1
38	H64-06	MOTOR GUARD	1
39	H61-05-007	CORD 110V AC W/ PLUG	1
40	H61-10	FOOT SWITCH W/ GUARD	1
41	H62-03-B	Optional MID-ARM Frame Extension	1
42	H61-29	TOOL BOX	1
43	H61-21-001	MOTOR SHAFT	1
44	H61-07	CHAIN #40	1
45	H61-08	MASTER LINK #40	1
46	H61-19	TRANSFER SHAFT w/ Grease Fitting	1
47	H61-20-001	KEY SEAT	1
48	H63-01-002	BHCS. 3/8 – 16 x 6.5	4
49	H61-24	CHAIN #50	1
50	H61-25	MASTER LINK #50	1
51	H62-02-013	SHAFT COLLAR 0.75	2
52	H63-01-001	SPECIAL BUSHING	1
53	H63-02-004	0.75" WASHER	1
54	H64-33-001	BHCS. 1/4 - 20 x .50	9
55	H61-30-003	FOOT SWITCH HANGER	1
56	H64-34-001	BHCS. 1/4 – 20 x 1.00	8

Warranty

Congratulations on your selection of the ***HIS Cable Puller H6000.*** The unique design helps reduce set-up time and manpower requirements, while increasing productivity and generally reducing the cost of cable installation.

HIS Business Mfg. Co., warrants to purchaser of ***HIS Cable Puller*** that if any assembly part thereof (exceptions) in the judgment of manufacturer is proven to be defective in material or workmanship within (1) year on original purchase date, such defects will be repaired or replaced (at manufacturer's option) free of charge for parts and labor (exception is warranted separately by

NOTES:

Date Purchased:

Serial Number:

HIS Business Manufacturing Company

Tel: (619) 447-0009 (800) 292-9831 Fax: (619) 447-4695

Web Site: www.hizbiz.com Email: sales@hizbiz.com